ADP-CA01

Camera Link Interface Daughter Board

INTRODUCTION

The ADP-CA01 is a Camera Link Interface daughter board for USB3-DIO01, it gets a frame to base board through D-sub connecter and transmits a frame to Camera Link interface port.

GENERAL DESCRIPTION

- ◆ Camera Link Output Daughter Board for USB3-DIO01

APPLICATION

- ◆ Camera Link Frame Grabber Test
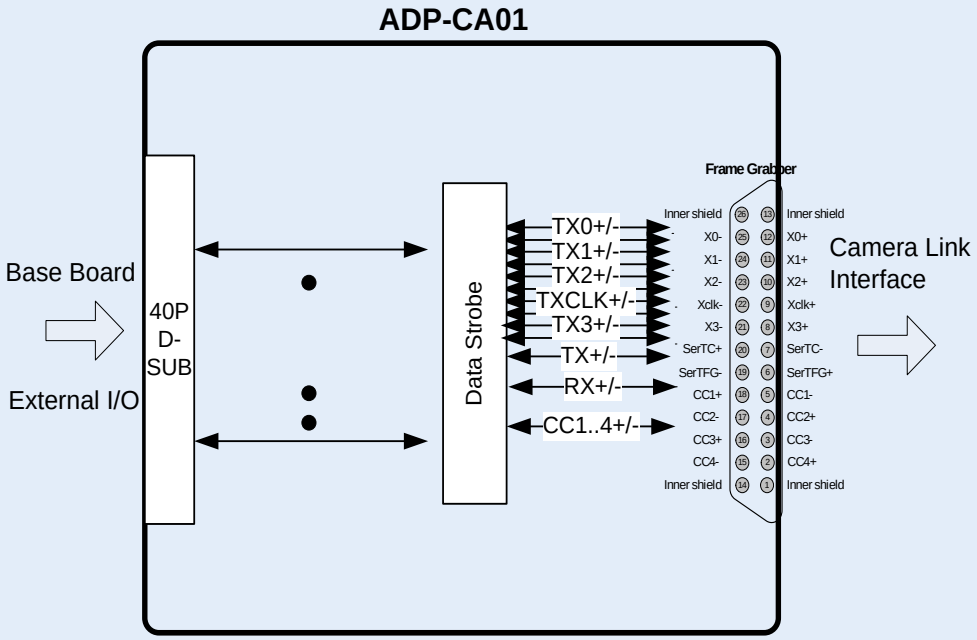
BLOCK DIAGRAM